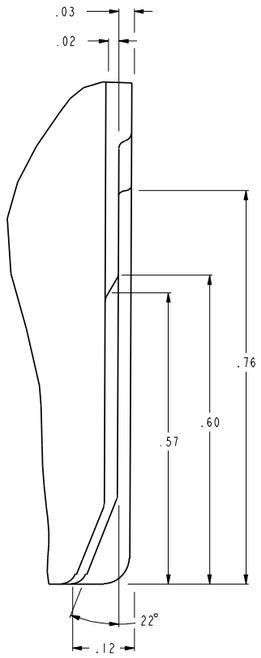

VIEW A-A
SCALE 7:1

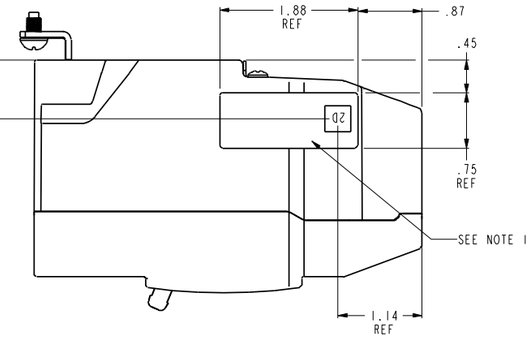

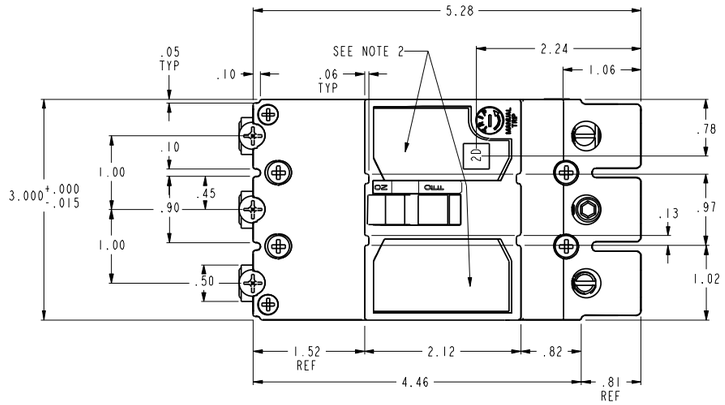

NOMINAL HANDLE OPERATING FORCES (LBS)	
ON TO OFF	6.5
TRIP TO RESET	7.5
OFF TO ON	2.2

WIRE CONNECTOR	USED ON	WIRE RANGE		LOAD END LUG TORQUE TO WIRE	LINE END MOUNTING SCREW TORQUE
		CU	AL		
A (SADDLE CLAMP)	15A - 20A	#12 - #14	#10 - #12	#10, 12, 14 - 35LB - IN	25 - 32LB - IN
B (LUG)	30A - 60A	#10 - #6	#8 - #4	#10 - 35LB - IN #8 - 40LB - IN #6, #4 - 45LB - IN	
	70A - 100A	#4 - #1	#2 - 1/0	#4 - 1/0 - 45LB - IN	
C (LUG)	110 - 125A	#3 - 3/0	#1 - 3/0	100 LB - IN	

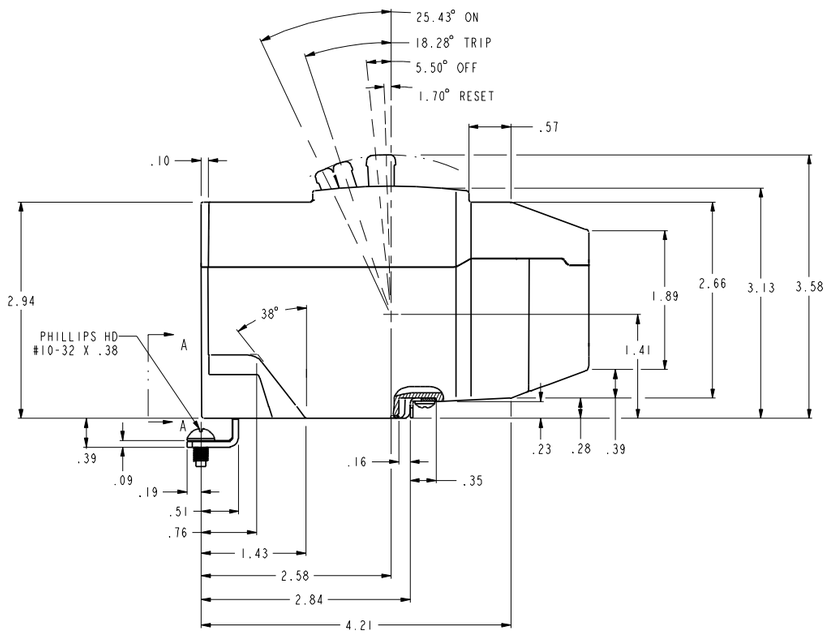

NOTE :

1. FOR LABEL DETAILS REFER PART # 10107781P1
2. FOR LABEL DETAILS REFER PART # 10107221P1

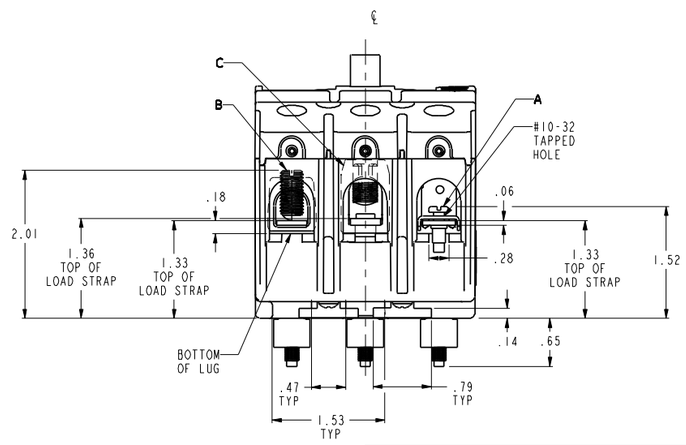

GE Consumer & Industrial — GENERAL ELECTRIC COMPANY

TITLE

OUTLINE DRAWING
TEYD/H/L - 3 POLE

SIZE	DRAWING	REV
D	10106029	3

SCALE: 1:1 | REF. No: . | SHEET 1 OF 1